WINDSHIELD WIPER/WASHER: VARIABLE INTERMITTENT

Component Index

Body Control Module (BCM)
Front Wiper Motor
Fuse Block-Rear
Fuse Block-Underhood
Instrument Panel Cluster (IPC)
Outside Moisture Sensor
Turn Signal/Multifunction Switch
Windshield Washer Fluid Level Switch
Windshield Washer Fluid Pump (Front)

Preliminary

WINDSHIELD WIPER/WASHER: VARIABLE INTERMITTENT

Circuit Schematic

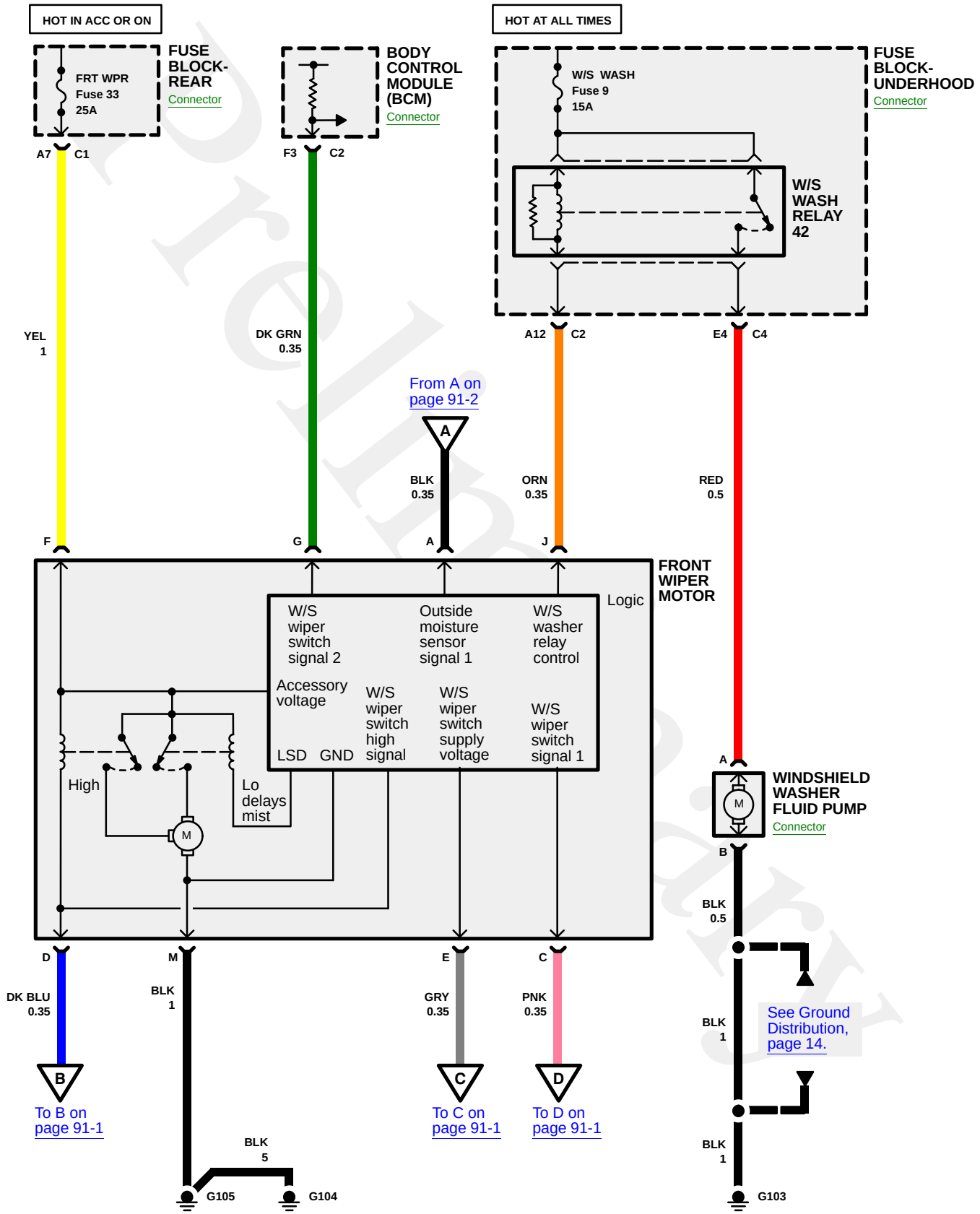

WINDSHIELD WIPER/WASHER: VARIABLE INTERMITTENT

Circuit Schematic

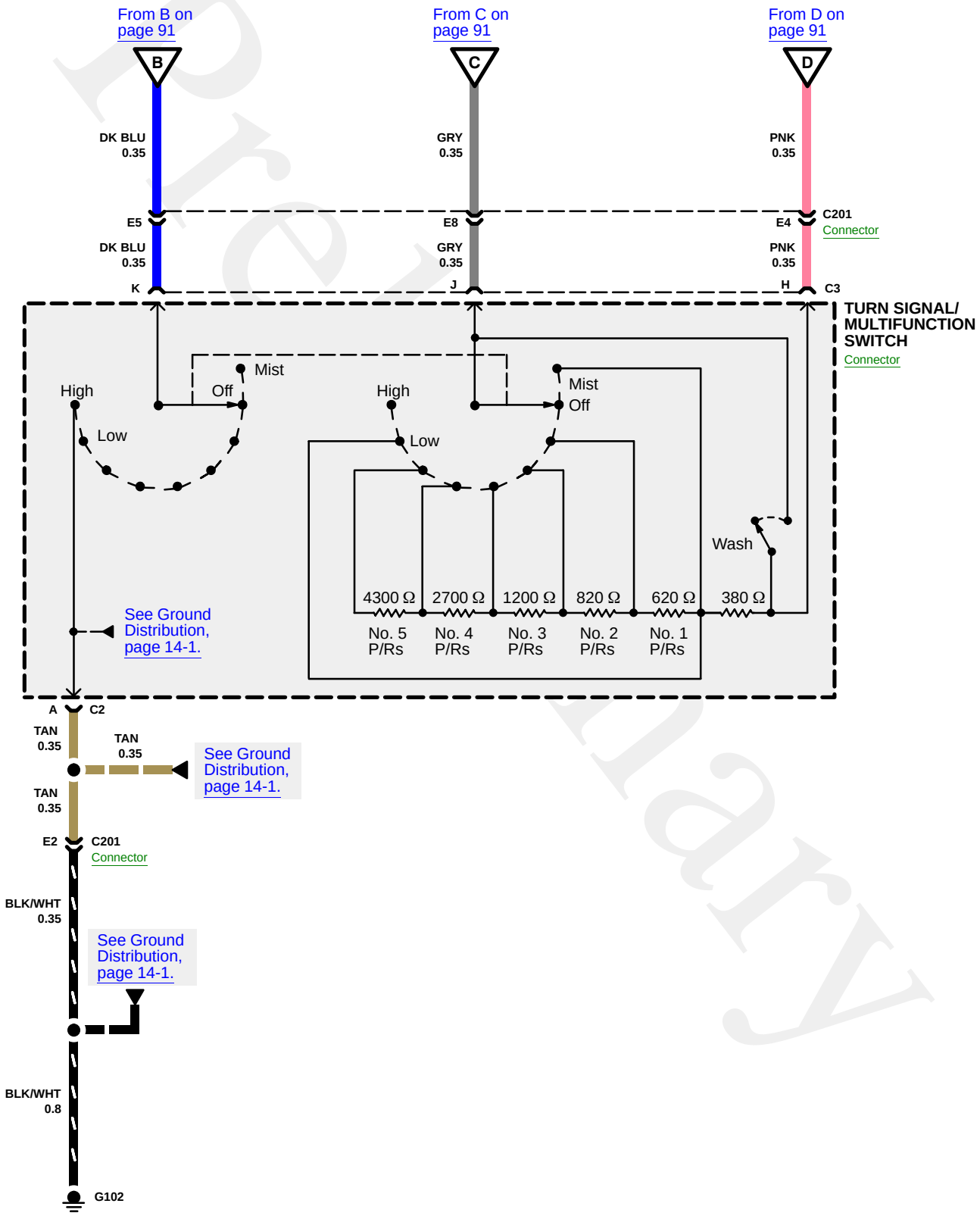

WINDSHIELD WIPER/WASHER: VARIABLE INTERMITTENT

Circuit Schematic

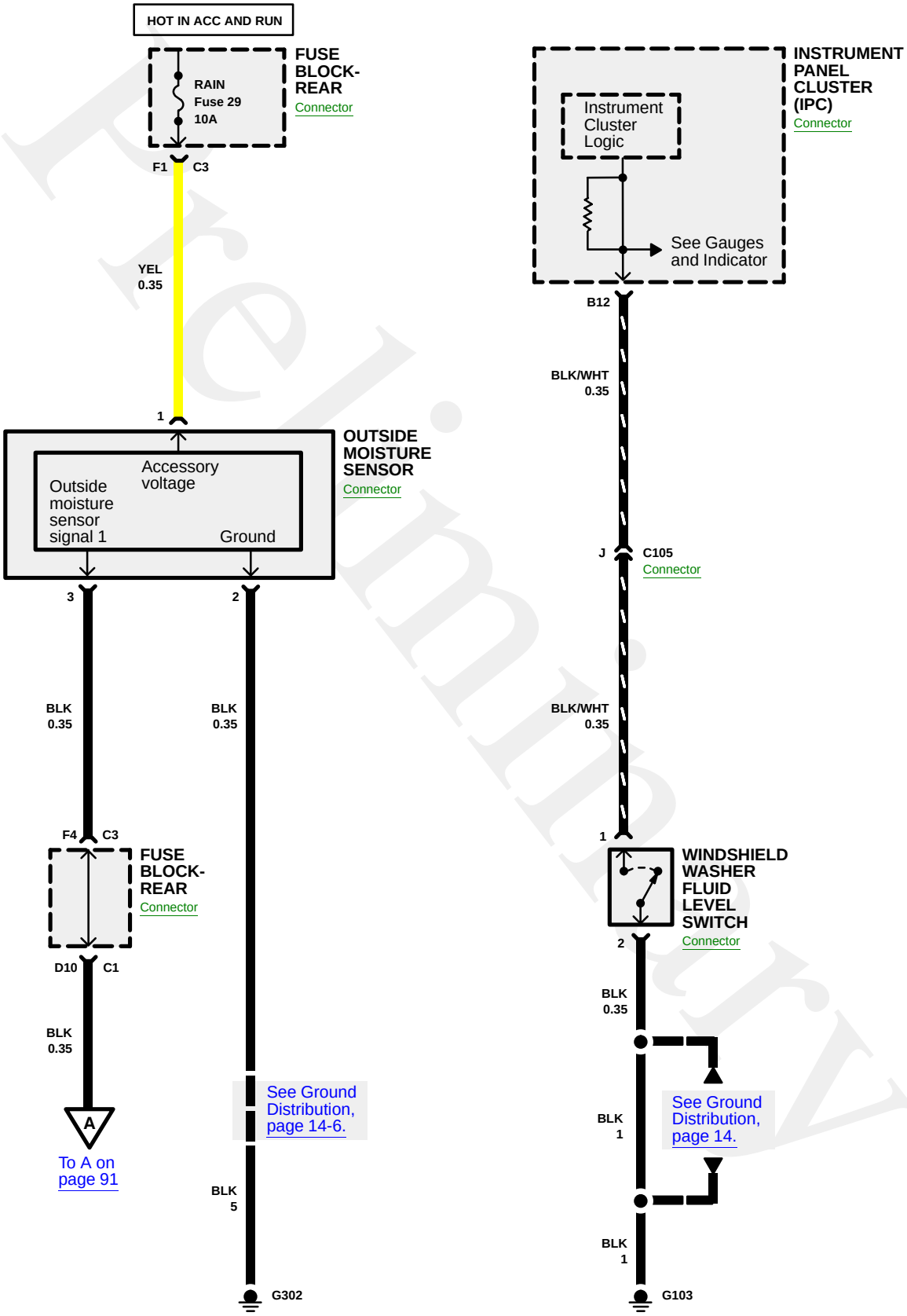

Preliminary

WINDSHIELD WIPER/WASHER: VARIABLE INTERMITTENT

Circuit Operation

Windshield Wiper/Washer System Components

The windshield wiper/washer system consists of the following components:

- Windshield wiper/washer switch
- Windshield wiper motor
- Windshield washer pump
- Windshield washer relay
- Outside moisture sensor
- FRT WIPER 25A fuse
- W/S WASH 15A fuse

Windshield Wiper/Washer System Operation

Accessory voltage and ground is supplied to the windshield wiper motor and provides the power for operating the wiper motor and logic power to the wiper motor module. The WASH, MIST, LOW, and DELAY modes are controlled by the windshield wiper/washer switch through a series of internal resistors. The windshield wiper switch supply voltage circuit is a 12-volt reference from the wiper motor module to the wiper/washer switch, and the switch position determines the point on the resistor assembly where the reference voltage is applied. The windshield wiper switch signal 1 circuit supplies the voltage from the resistor assembly to the wiper motor module and the signal voltage determines the operating mode. High speed operation is controlled by the windshield wiper/washer switch through the windshield wiper switch high signal circuit. The windshield wiper switch high signal circuit is supplied 12 volts by the wiper motor module and when the wiper/washer switch is turned to the HIGH position the windshield wiper switch high signal circuit is grounded through the switch ground circuit. The windshield washer pump is controlled through the windshield wash relay. The windshield wash relay coil and switch is supplied battery positive voltage, and during WASH mode the wiper motor module grounds the washer relay control circuit energizing the relay. When the relay is energized battery positive voltage to the switch side of the relay is supplied to the washer pump control circuit. The windshield wiper switch signal 2 circuit from the wiper motor module is used by the body control module as a signal to turn on the low beam headlamps.

Moisture Sensitive Wipers

The outside moisture sensor monitors moisture accumulation on the windshield and provides an input to the windshield wiper motor module. If no moisture is detected, the wipers will not operate in the DELAY modes. The windshield wiper switch signal 1 circuit is used to activate the automatic operating mode and to adjust the level of sensitivity to moisture accumulation when commanding a wiper motor wipe cycle. The moisture sensor sends a PWM voltage signal to the wiper motor module through the moisture sensor signal 1 circuit whenever the ignition is in the accessory or run positions. If at anytime the moisture sensor signal 1 circuit PWM voltage signal input to the wiper motor module is lost, the wiper motor module will use the input from the windshield wiper switch signal 1 circuit to operate the wiper motor at continuous variable delay intervals.

Check Washer Fluid Message

The Check Washer Fluid message is controlled by the instrument panel cluster using an input from the washer fluid level switch. The washer fluid level signal circuit is supplied ignition voltage through a resistor then monitored within the instrument cluster. The washer fluid level switch is normally open so the instrument cluster detects ignition voltage on the washer fluid level signal circuit whenever the washer fluid level is not low. When the washer fluid reaches the point where the driver should be informed that the washer fluid is low, the washer fluid level switch closes. When the washer fluid level switch is closed the washer fluid level signal circuit voltage is pulled low, and the instrument panel displays the Check Washer Fluid message on the driver information center. In order to prevent the Check Washer Fluid message from being displayed while sloshing is occurring in the washer fluid container, the instrument cluster is programmed with a 1 minute delay before changing states of the Check Washer Fluid message during an ignition cycle.

WINDSHIELD WIPER/WASHER: VARIABLE INTERMITTENT

Component Location Index

(Refer to Section 201 for photographs.)

Component		Photo No.
Body Control Module (BCM)	On Rear Fuse Block, under left rear seat	53
Front Wiper Motor	Under cowl cover (cover removed)	17
Fuse Block-Rear	Under the left rear seat	52
Fuse Block-Underhood	Left side of engine compartment	3
Instrument Panel Cluster (IPC)	On the left side of the IP, above the steering column	59
Outside Moisture Sensor	Attached to windshield, near inside rearview mirror	
Turn Signal/Multifunction Switch	On the stalk, on the left side of the steering column	71
Windshield Washer Fluid Level Switch	Attached to the fluid reservoir in the underhood compartment	11
Windshield Washer Fluid Pump (Front)	Attached to the fluid reservoir in the underhood compartment	12
Connector		
C105 (17-BLK)	Left side of engine compartment	4
C201 (17-BLK), (18-BLK), and (13-GRY)	At base of steering column	120
Ground		
G102	Left side of engine compartment	4
G103	Right rear of engine compartment	15
G104	Left Rear of Hood	9
G105	Left side of engine compartment	4
G302	On the lower left B-pillar	105

Preliminary